MODERN POCKET DOOR MORTISE HOLE PREPARATION PASSAGE & DUMMY

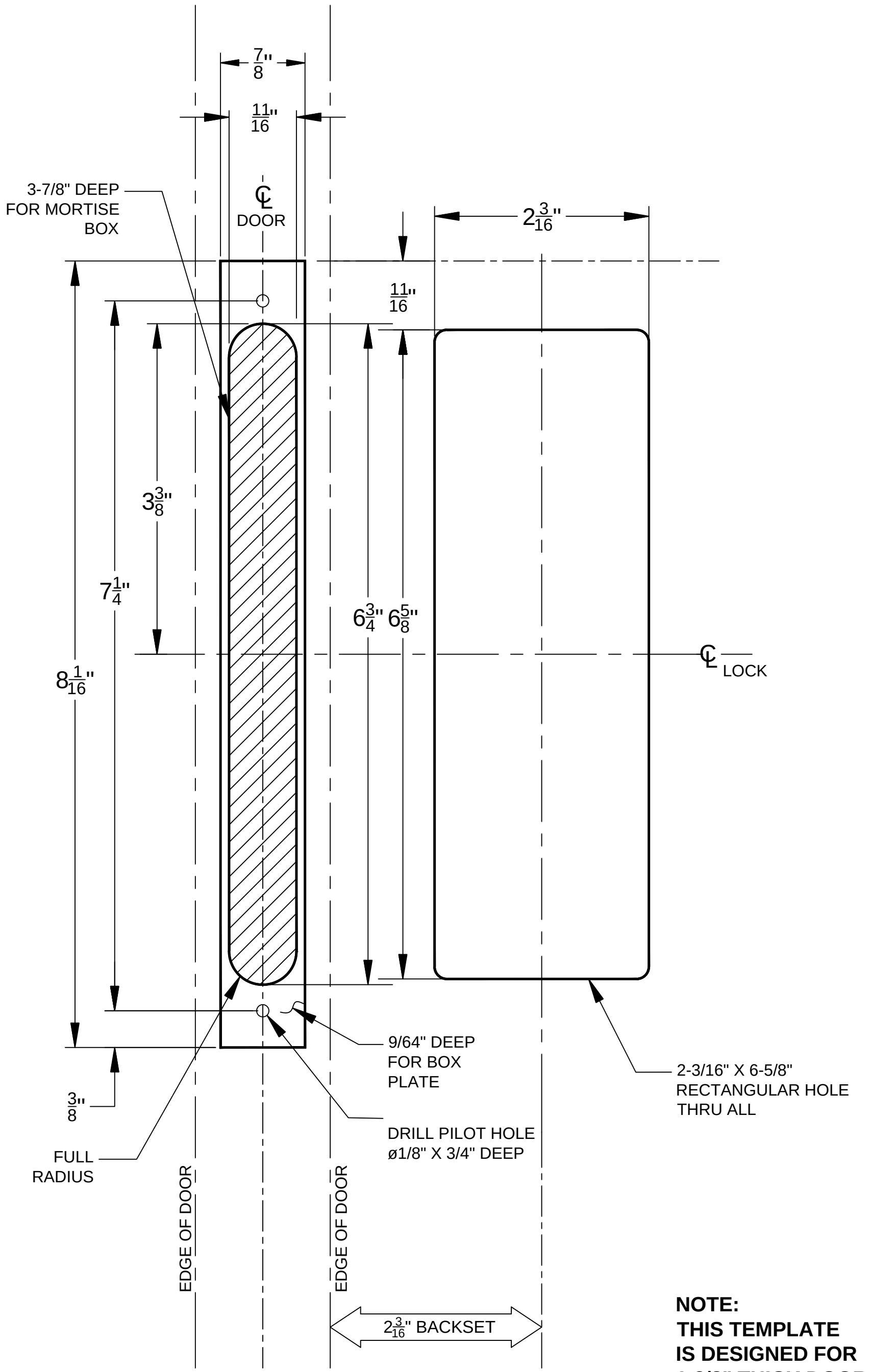

NOTE:
THIS TEMPLATE IS DESIGNED FOR 1-3/8" THICK DOOR.

*** NOTE: 8-1/2" X 11" COPY OF THIS TEMPLATE NOT TO SCALE.**